Kinetico®
water systems

# Owners Manual

## TX Series

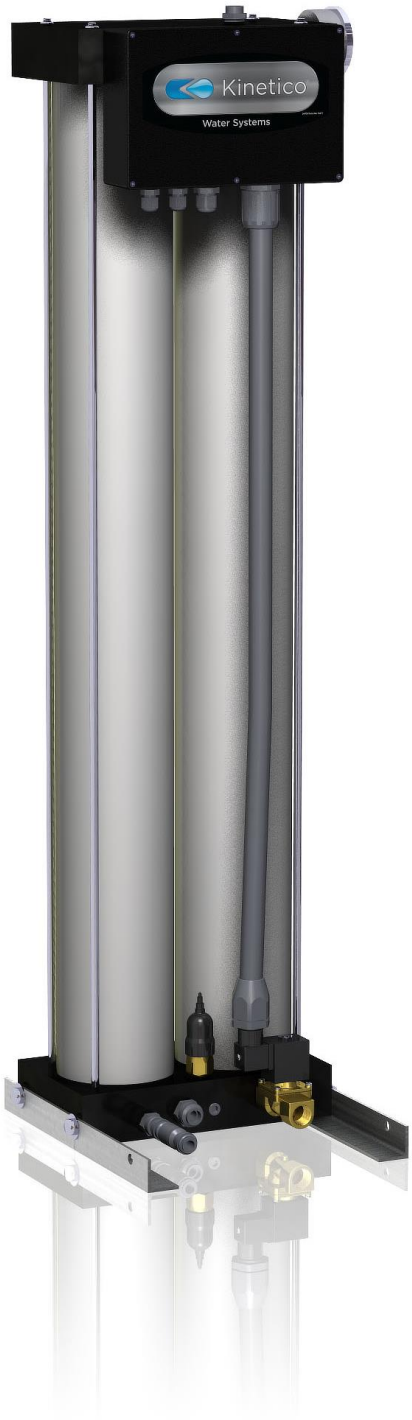


**Model:**

TX 1440, Standard Mode
TX 1440, Saltless Mode

# TABLE OF CONTENTS

# ABOUT THIS MANUAL

This manual will cover information needed for the proper installation and operation of your Kinetico TX Series Commercial Reverse Osmosis System. We have also included information regarding the frequently asked questions about reverse osmosis systems. This information may be more technical in nature, but provides further insight to the continued operation of this equipment to its highest standards.

This manual will use various icons to help highlight issues that are relevant to the safe operation of this equipment. The following icons will be used as described:

General information regarding the application of this product will be highlighted by this icon. This will include technical specifications and expected operational results.

A caution icon will be used to present any information that may hold a potential hazard or concern during the installation, use or maintenance of this product. **Should this information not be followed, it may result in damage of this equipment and its surroundings.**

The warning icon will be used to present any information that may result in a severe hazard or concern during the installation, use or maintenance of this product. **Should this information not be followed, it may result in severe physical harm.**

Any tools or materials required during the installation, use or maintenance of this equipment will be preceded by this icon. Using these specific tools will minimize time and effort. Not using the proper tool may result in damage to this equipment, its surroundings or even physical harm.

If there are any additional questions pertaining to this equipment, please contact your local Kinetico Dealer for further assistance.

# REVERSE OSMOSIS TECHNOLOGY

In the early 1960s, the use of reverse osmosis (RO) began its commercial debut. Before this time, the technology had been used by the U.S. military for the purification of water for troops. Since its introduction into the market, RO has continued to gain popularity. RO technology offers the finest level of filtration available. The RO membrane acts as a barrier to dissolved salts and inorganic molecules, as well as organic molecules with a molecular weight greater than approximately 100. Water molecules, on the other hand, pass freely through the membrane creating a purified product stream.

The applications for RO are diverse and include desalination of sea water or brackish water for drinking purposes, food and beverage processing, purification of home drinking water and many others. Utilizing RO prior to Ion Exchange (IX) for the production of ultra high water qualities dramatically reduces operating costs and regeneration frequency of the IX system. Pressures associated with RO systems can range from 40 psi for tap water systems to 1,000 psi for sea water desalination systems.

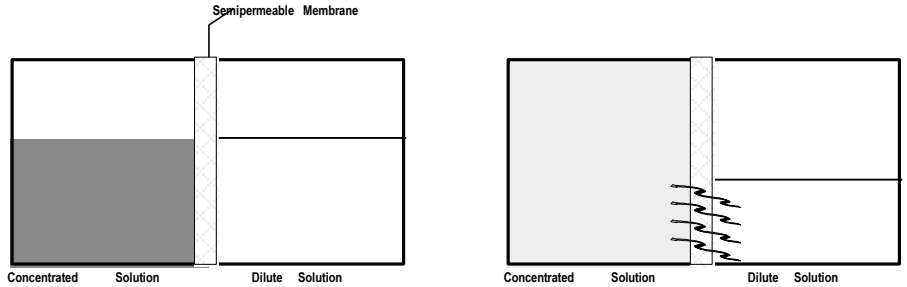


**Figure 1**

RO technology is not new. The process of osmosis is actually found in nature and in the human body. In this application human membranes allow nutrients or waste products to pass in and out of the blood stream. “Semipermeable” means that the membrane is permeable to some species and not permeable to others. Most semipermeable membranes allow water to pass through and not other molecules or ions. Figure 1 shows a concentrated solution will increase in volume as water from the dilute solution permeates through the membrane. In this fashion, the concentrations on either side of the membrane become equal, even though the volumes are not.

This dilution relationship can be quantified by the rise in the height of the salt solution. This height will increase until the pressure of the column of water (salt solution) is so high that the force of this water column stops the water flow. The equilibrium point of this water column height in terms of water pressure against the membrane is called osmotic pressure.

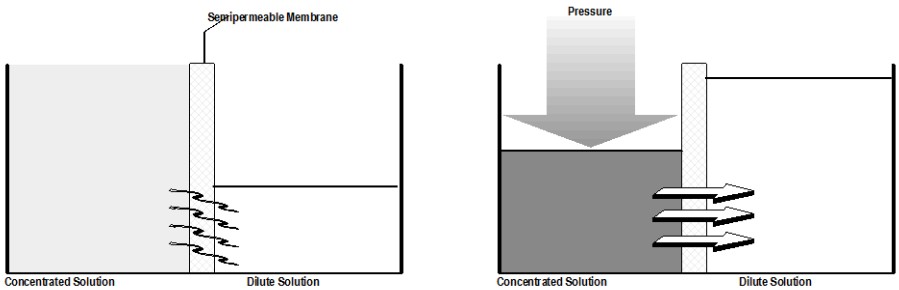


**Figure 2**

Reverse osmosis (Figure 2) is created if a force is applied to this column of water. Thus the direction of water flow through the membrane can be reversed. This is the basis of the term reverse osmosis. This reversed flow produces “permeate” water from the salt solution, since the membrane does not permit most salt to pass through it. The typical rejection of a semipermeable membrane is over 95%. This means that it will reject 95% of the salts and let 5% pass through.

# THE TX SERIES MEMBRANE SYSTEM

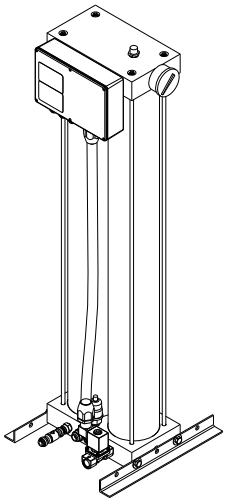

The TX RO is an advanced system using membrane technology to treat a variety of water concerns. The capabilities of the system allow it to operate with minimal service requirements. This feature allows for optional service contracts throughout our qualified, local dealer network, to take care of nearly any water concern, with bi-monthly to quarterly check-ups.

The TX uses reverse osmosis technology to reduce the total level of dissolved solids in a feed stream. The system uses spiral wound RO membranes for production of permeate water. The permeate water from the system typically exhibits a 90% or better reduction of the total dissolved solids level (TDS) from the feed water. The reject water contains the concentrated minerals that have not been permitted to pass through the membrane.

## System Options

Depending on the inlet characteristics of your water, additional components may be required with your TX Series Reverse Osmosis System. The configuration of these accessories along with their functionality has been listed. Should you require further information regarding this equipment, please contact your local Kinetico Dealer.

### Pretreatment

Depending on your application and inlet water conditions, additional pretreatment equipment may be required with the TX RO system. The design of the TX unit allows this pre-filtration to be flexible to your exact needs.

Three levels of pretreatment equipment are possible with the TX:

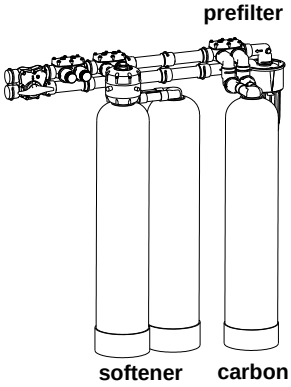


**Prefilter**
Pre-filtration is recommended down to 5 microns to maximize the life of the system's membranes. This filtration requirement can be handled by a Kinetico filter system or equivalent filter capable of 5 micron filtration at 5 gpm.

**Carbon**
Applications that contain oxidizers (such as chlorine or chloramines) in the inlet water require treatment for the removal of these oxidizers. Kinetico offers a full range of dechlorination products suitable for pretreatment to the TX RO.

> ⚠ The maximum influent level of any oxidizer to the TX RO is 0.05 mg/L. Prolonged exposure to excessive levels of chlorine will cause membranes to be destroyed. If this occurs, the only remedy would be to replace the membranes.

**Softening – Hardness and Iron Treatment**
While the TX can be configured to run process water without a softener, in some applications a softener may be preferred as a pretreatment option. If hardness levels exceed 4 gpg (70 mg/L as $CaCO_3$) or if clear iron over 0.2 mg/L is present, it will reduce the service life of the membrane.

To minimize concerns of hardness, two configuration options are possible;

**Saltless Mode**
In TX's saltless mode, the purge factor for the system is increased to compensate for scaling issues.

**Softener Mode**
Incorporation of a softener is the more traditional configuration for a membrane system's pretreatment. With this option, Kinetico carries a full line of softeners to meet any hardness pretreatment condition for the TX RO.

## Storage and Repressurization

For operation in whole house applications, a storage tank is required to store water and then deliver it at a desired pressure. Two alternatives for storage tanks are available;

**Hydro Pneumatic Tank**
This tank type is closed and pressurized using an internal air charge to create the delivery pressure for the stored water.

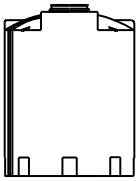

**Atmospheric Tank**
An atmospheric tank is closed and includes an air vent so that the water can be added or removed from the tank without creating pressure. The advantage of this tank type is that venting eliminates any backpressure on the TX unit, thus increasing the TX system's operating production and efficiency. When using an atmospheric tank, an external repressurization pump is used to remove water from the tank and pressurize it throughout your home.

## Post Treatment

**Ozonation**
With the use of atmospheric tanks, ozonation can be used as a source for continuous disinfection of the water, or as an added method in the treatment of some contaminants not treated by the TX membrane system. This includes contaminants such as sulfur as well as some organics.

**UltraV**
As an optional disinfection process for the system, a Kinetico UltraV system can be used to provide ultra violet sterilization to the treated water.

**Hydrogen Sulfide Treatment**
In applications with significant sulfur concerns (> 5 mg/L) a Hydrogen Sulfide polishing filter can be effectively used after the TX system to rid the water completely of any residual hydrogen sulfide.

**Mineralization**
The TX system is effective in removing most everything from the water, but some customers prefer the consumption of mineralized water. Adding low levels of minerals after the TX will still provide you the benefits of soft water throughout your home, and the mineral contact will give a bottled water taste to every tap in your home.

# SYSTEM SIZING

In sizing the TX RO, the output production based on average system operating conditions (and depending on some factors) can change significantly.

Factors that must be examined include:

**Water Temperature**

This is the temperature of the water prior to entering the unit. The unique design of the TX RO will transfer excess energy from the pump in the form of heat to the water as a part of its normal function. This process will slightly increase the internal temperature of the water processed by the TX system, allowing it to permeate more water. This added heat is incorporated into the product chart shown.

**Working Pressure**

The working pressure can be calculated using (4) pressure measurements:

Working pressure = System Pressure + Inlet Pressure – Osmotic Pressure – Back Pressure

- or -

Working Pressure = 60 + IP – OP – BP

The **System Pressure (SP)** is equivalent to the boost pressure of the TX RO's pump. For the TX 1440, this factor is 60 psi.

The **Inlet Pressure (IP)** is the dynamic pressure feeding the RO system. This pressure should be either measured while the TX RO system is operating or when 3 gpm is flowing from the main feed line.

The **Osmotic Pressure (OP)** can be calculated based on the inlet or feed TDS of the water. The OP = TDS / 100.

The **Back Pressure (BP)** is determined by the type of storage tank connected to the system.
If an atmospheric storage tank is used, then BP = tank height / 2.3.
If a hydropneumatic tank is used, then BP = the average pressure between the tank's on/off set-point 40/60 = 50.

**Production Chart**

## Daily Production Rates (gallons / day)

| Working Pressure (psi) | Water Temperature (°F) 40 | 50 | 60 | 70 | 80 | 90 |
|---|---|---|---|---|---|---|
| 70 | 619 | 792 | 979 | 1,210 | 1,440 | 1,714 |
| 80 | 703 | 887 | 1,117 | 1,382 | 1,613 | 1,958 |
| 90 | 791 | 998 | 1,257 | 1,555 | 1,814 | 2,203 |
| 100 | 878 | 1,109 | 1,397 | 1,728 | 2,016 | xx |
| 110 | 966 | 1,220 | 1,536 | 1,901 | 2,218 | xx |
| 120 | 1,054 | 1,331 | 1,676 | 2,074 | xx | xx |
| 130 | 1,142 | 1,441 | 1,816 | 2,246 | xx | xx |

# SYSTEM SPECIFICATIONS

General operating parameters for the TX RO product line have been listed in the table below. These specifications have been provided to express the required conditions for the operation of this system. If there are other parameters that you may be concerned about, please contact your local Kinetico Dealer for further operating or performance data.

## System Components

Inlet Valve.....1/2" Stainless Steel Solenoid Valve
Pressurization Pump.....Multi-stage Submersible Pump
Motor.....3/4" HP NEMA Motor
Membrane Housing (qty.) .....(1) PVC
Primary Membrane (qty) ..... (1) Thin Film Composite 4.0 x 40" (85 $ft^2$)
Recirculation Control .....Fixed Orifice
Drain Control .....Fixed Orifice
Low Pressure Protection.....15 psi (1.0 bar) Cut-off Switch
System Shutoff Control..... N.O. Contact, Close to Shutoff
System Controller.....Electronic Circuit Board

## Inlet Water Quality

Inlet Flow Rate.....3 gpm
Inlet Flow Rate – Saltless Mode.....6 gpm
Operating Pressure Range .....25 – 70 psi Dynamic Pressure
Temperature Range..... 35 – 90º F
pH Range .....4 – 10 SU
Free Chlorine $Cl_2$ (Max.) .....<0.05 mg/L
Hardness as $CaCO_3$ (Max.) .....<4 gpg
Hardness as $CaCO_3$ (Max.) – Saltless Mode .....<30 gpg
Silica (Max.).....<10.0 mg/L
Iron as Fe (Max.) .....<0.2 mg/L
Total Dissolved Solids (TDS) as NaCl (Max.).....<2,500 mg/L

## Operating Specs

Daily Commercial Production (77º F, 500 mg/L Feed Water) . 2,000 gallons/day
Daily Residential Production (77º F, 500 mg/L Feed Water).....500 gallons/day
Permeate Flow Rate.....1.4 gpm
Reject Flow Rate .....1.4 gpm
Permeate Flow Rate – Saltless Mode .....1.2 gpm
Reject Flow Rate – Saltless Mode .....5 gpm
Reject Rate (NaCl / $CaCO_3$).....92% / 98%
Dimensions (Width x Depth x Height) .....11" x 13" x 43"
Weight (Operating / Shipping)..... 100 / 80 lbs.
Maximum Operating Pressure ..... 130 psi

## Connections

Inlet ..... 1/2" FNPT
Permeate..... 3/8" Tube
Drain Connection..... 1/2" Tube
Power ..... 230 VAC / 60 Hz, 8 Amps

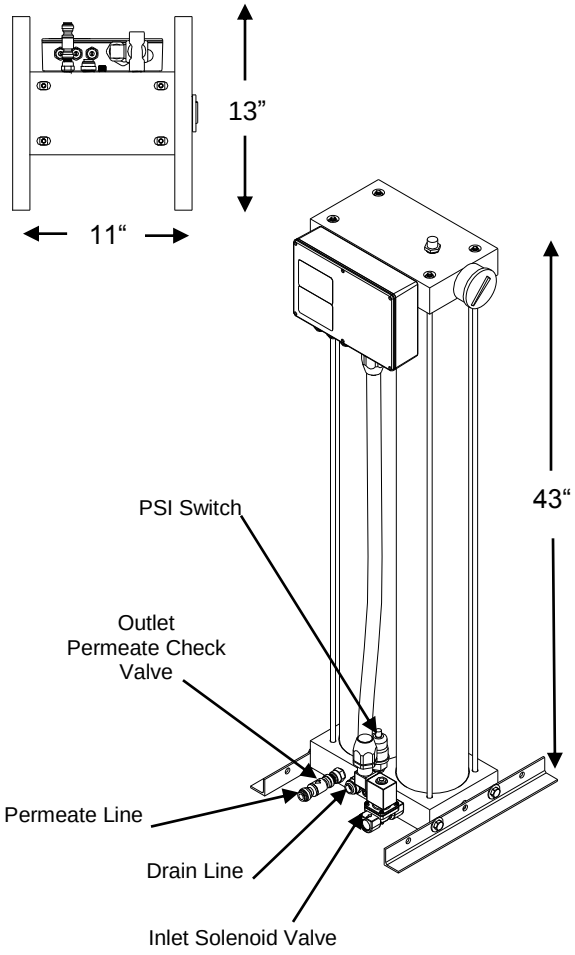


## Production Chart

**(To Atmospheric Tank)**

| Temp. | 500 mg/L | Recovery % Standard | Recovery % Saltless | 1,000 mg/L | Recovery % Standard | Recovery % Saltless | 2,000 mg/L | Recovery % Standard | Recovery % Saltless |
|---|---|---|---|---|---|---|---|---|---|
| 40º F | 900 gpd | 30 | 11 | 830 gpd | 28 | 10 | 690 gpd | 25 | 9 |
| 50º F | 1,160 gpd | 36 | 13 | 1,060 gpd | 35 | 12 | 880 gpd | 30 | 10 |
| 60º F | 1,400 gpd | 40 | 16 | 1,280 gpd | 38 | 15 | 1,060 gpd | 35 | 12 |
| 70º F | 1,700 gpd | 45 | 20 | 1.540 gpd | 42 | 18 | 1,260 gpd | 38 | 15 |
| 80º F | 2,000 gpd | 50 | 23 | 1,860 gpd | 47 | 22 | 1,480 gpd | 42 | 17 |

**(To Pressurized Storage Tank 30/50)**

| Temp. | 500 mg/L | Recovery % Standard | Recovery % Saltless | 1,000 mg/L | Recovery % Standard | Recovery % Saltless | 2,000 mg/L | Recovery % Standard | Recovery % Saltless |
|---|---|---|---|---|---|---|---|---|---|
| 40º F | 510 gpd | 20 | 7 | 450 gpd | 18 | 6 | 360 gpd | 15 | 4 |
| 50º F | 660 gpd | 24 | 8 | 580 gpd | 22 | 7 | 460 gpd | 18 | 5 |
| 60º F | 800 gpd | 28 | 9 | 700 gpd | 25 | 8 | 540 gpd | 21 | 6 |
| 70º F | 980 gpd | 32 | 11 | 860 gpd | 29 | 10 | 660 gpd | 24 | 8 |
| 80º F | 1,180 gpd | 37 | 14 | 1,000 gpd | 33 | 12 | 740 gpd | 27 | 9 |

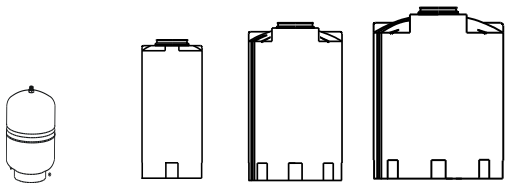

## Storage Tank Options

| | | | | |
|---|---|---|---|---|
| Tank Description | 80 Gallon | 300 Gallon | 550 Gallon | 1,000 Gallon |
| Tank Part Number | 7483 | 7495 | 7496 | 7498 |
| Tank Height | 58” | 80” | 83” | 84” |
| Tank Footprint | 24” DIA | 35” DIA | 48” DIA | 64” DIA |
| Material | Lined Fiberglass | HDPE | HDPE | HDPE |

## Part Numbers

TX 1440, 230 VAC, 60 Hz, Standard Mode (50% Recovery) ..... 13580
TX 1440, 230 VAC, 60 Hz, Saltless Mode (25% Recovery) ..... 13594

# COMPONENT FUNCTIONALITY

The TX RO is comprised of various components. A brief description has been provided for each of these major components. The illustration helps depict the physical location of these components on the TX RO, while the flow schematic shows the flow path through the system.

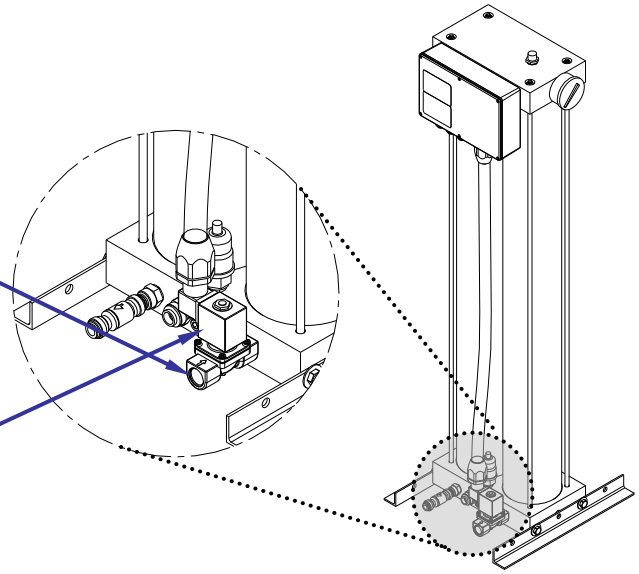

**Inlet** The inlet to the system is located adjacent to the filter housing. This connection is 1/2" NPT. The required inlet pressure is 15 psi at 3 gpm.

**Feed Solenoid Valve**
A nickel plated brass, normally closed (NC) solenoid valve is used to shut flow off to the system during shutdown or alarm conditions.

**Pressure Gauge**
This pressure gauge shows the water pressure after it has been processed by the pump. It is equal to the inlet pressure plus the pump pressure.

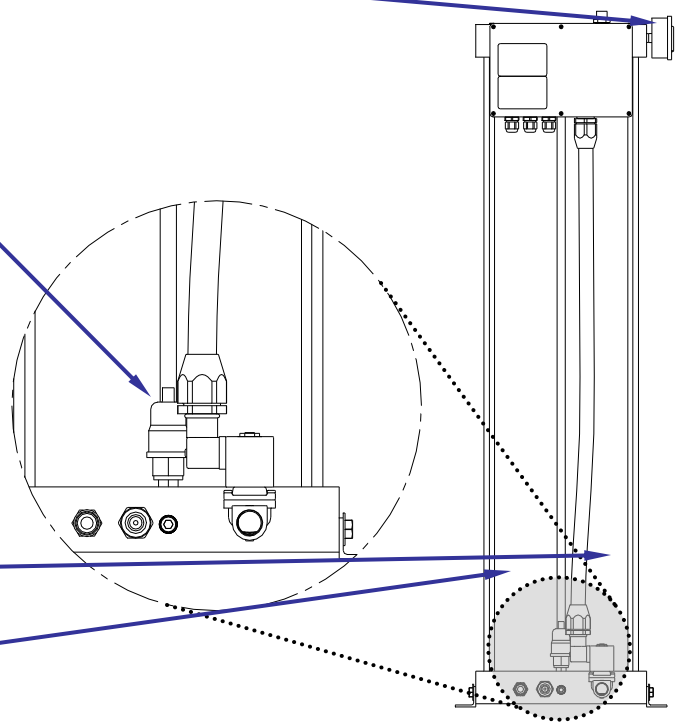

**Low Pressure Switch**
The low pressure switch is used to shut the system down if there is an inadequate feed pressure. The set point for the pressure switch is 15 psi (1.0 bar). The switch is located between the two housings.

Do not operate the system with this safety device by-passed.

**Pump-in-Tube** The pump-in-tube provides pressure to the TX RO as required for proper operation. The use of this pump style is a design advantage that also provides extraordinarily quiet operation compared to typical pumps being used. Typical operating pressure should be at 85 to 130 psi for the TX-ROs.

**Membrane Housing / Membrane**
Each membrane housing holds one 4" x 40" (10.12cm x 101.16cm) Thin Film Composite membrane.

**Concentrate Flow Control Assembly**
The concentrate flow control is used to regulate the recovery of the system. The TX RO Systems are designed to operate at a 50% recovery efficiency and at 25% recovery when operating in the Saltless mode.

**Drain Connection**
The drain connection is a 1/2” tube quick-connect fitting, located at the center of the system.

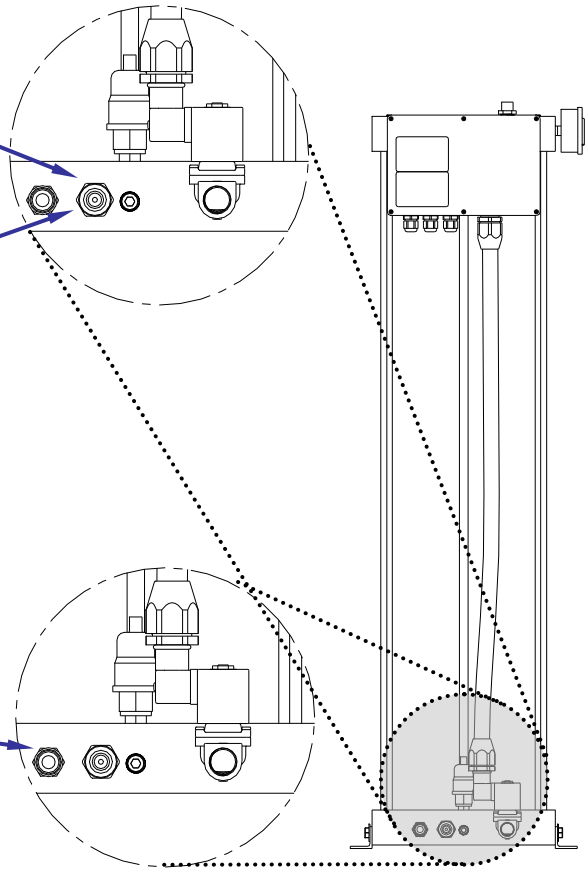

**Permeate Connection**
The permeate connection is a 3/8” tube quick-connect fitting, located on the left side of the system. This line should be plumbed to an atmospheric storage tank.

**Control Box**
The control box includes instrumentation pertinent to the operation of the system. All electronic components of the unit are wired through the control box. Main power is also routed into the box.

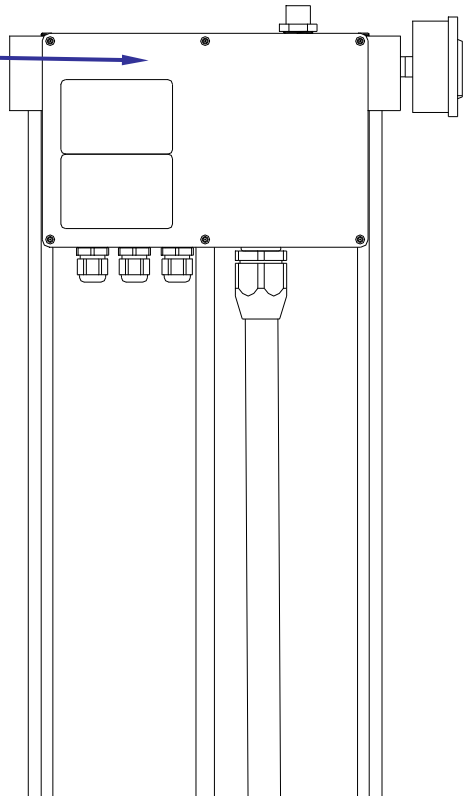

# INSTALLATION

The following procedures have been developed to assist you during the installation of your TX 1440 Whole House RO.

The installation of this RO should be performed by a qualified service person with an understanding of local and regional codes that may affect the installation requirements.

## Pre-installation Review

Before beginning the installation of the RO system, confirm system configuration to be installed, and components that have been ordered. Please review RO system specification sheet that includes required components.

Review of the customer's facility is also recommended, especially critical operating data that could affect the operation of the system:

**Water Pressure**
Water pressure to the RO system will affect the maximum flow permitted by the system. The RO system will not operate if the inlet pressure fluctuates below a dynamic pressure of 15 psi (1.0 bar). This minimum pressure must be maintained to the system at all times. Should the pressure fluctuate below this level, a booster pump may be required. Maximum feed water pressure to system is 70 psi.

**Temperature**
Ambient temperature must be maintained above 32°F (0°C). Freezing temperatures will cause breakage of equipment and void all warranties.

**Water Temperature**
Inlet water temperature must be maintained between 35°F and 90°F to prevent damage to the system's membranes.

**System Location**
The unit is designed for indoor or outdoor installation. All electrical components are water-tight rated, and all exposed construction materials are UV resistant.

## RO Installation

**Tools and Installation Materials**
Since the RO processes high quality water and plumbing runs on the process, purge and drain outlets should all be completed with PVC piping or polyethylene tubing. Copper and galvanized pipe may demonstrate corrosion characteristics when subjected to permeate quality water.

## Unpacking

1) Remove the RO from its packaging.
2) Inspect unit for possible shipping damage:
   -broken fittings
   -dents or scratches
3) Check all connections and mounting bolts. Tighten as necessary as they may have loosened during shipment.

4) Remove auxiliary materials package and documentation.

## Positioning

Outdoors or indoors.
Level.
Access to drain.
Access to electrical hookup.
Access to adequate water supply.

After moving the unit to the installation site, select an area where the unit can be serviced from the top and front. When installing next to a wall, leave a minimum of a 6” access to the back of the unit. Leave a minimum of 6” on both sides of the system. 36” access in front of the system is required for the electrical control box.

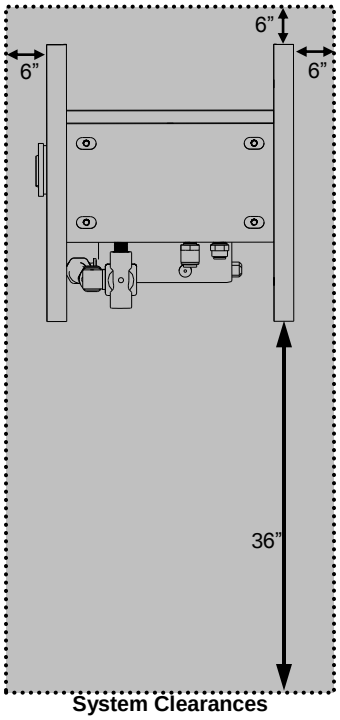


System Clearances

Figure 1

## Plumbing Hook-ups

1) Connect the feed water line to the inlet of the TX 1440 Whole House RO (1). The connection on the RO is 1/2” FNPT, and is directly on the inlet solenoid valve.
2) From the check valve, connect your permeate line using 3/8” tubing (2). This connection should lead to an atmospheric holding tank or to a pneumatic air charge tank.
3) Connect the drain line using 1/2” tubing (3). This connection should be made to a drain in compliance with the local codes and requirements in your area.
4) In addition to the RO plumbing hook-up, it is recommended to install a system by-pass using adequately-sized ball valves.

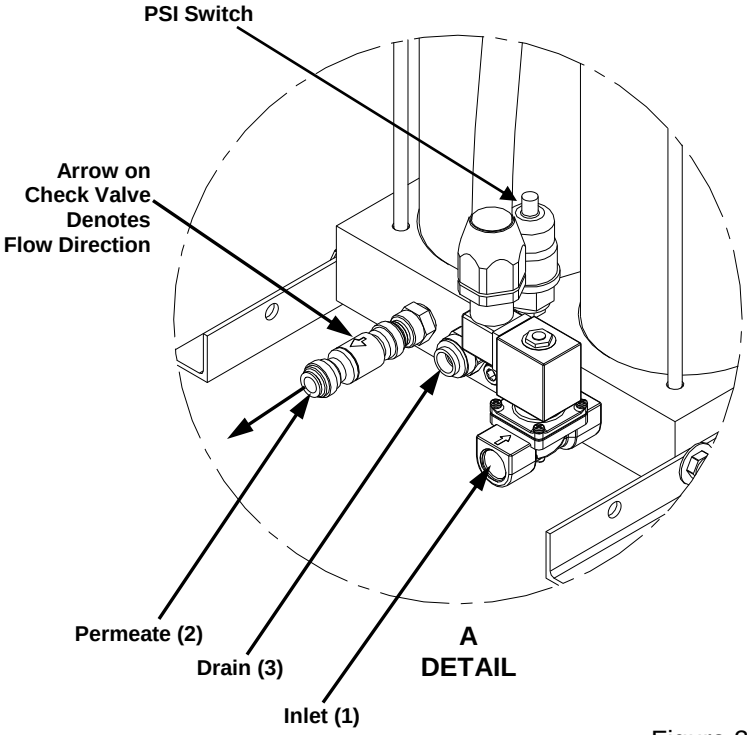


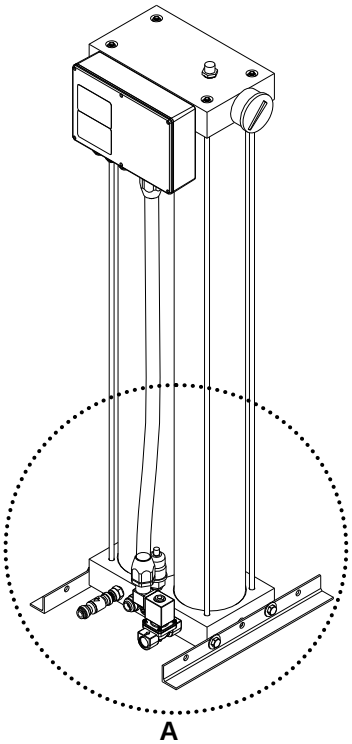


Figure 2

## Electrical Connection – 240 Volt Single Phase

After making the plumbing connections, connect power to the TX 1440 Whole House RO. Power requirements are listed below.

**240VAC, 60 Hz, single phase**

- Full Load Current: 8.1A
- Required Branch Circuit Device: 250V/15A RK5 Time Delay Fuse
- Branch Circuit Conductor: #14 AWG Minimum (75ºC Cu)
- Equipment Grounding Conductor: #14 AWG Minimum (75ºC Cu)
- Fusible and lockable disconnect switch with a minimum rating of 250 VAC/30A, including class R rejection mechanism must be installed within 50 feet of this equipment or per local regulations. The disconnect switch must be visible from this equipment.

**Tools and Materials Required for Electrical Install**
Fused Disconnect
Multi-meter

Use a multi-meter to confirm power to be supplied to TX 1440 Whole House RO is proper voltage. After confirming voltage of the source power, shut off that power line, and confirm it is de-energized with the multi-meter. It is also recommended to use a lock-out kit on the power supply to prevent it from being energized during installation.

1) **Wiring must be done by a qualified electrician and must follow all local and appropriate codes.**
2) This unit must be connected to a dedicated disconnect. That disconnect should be within 50 feet (15 meters) of the equipment and within visible sight. The disconnect must be fusible and lockable with a minimum rating of 250 VAC/30A.
3) The disconnect should use UL Class RK5 TD (or equivalent). (Fuses must be sized accordingly. See information above.)
4) Make the power connection to the RO from the fused disconnect. The power conductors should be terminated on terminals as shown in Figure 3 below. Terminate the grounding conductor on terminal as shown in Figure 3 below.
5) Connect normally open level/pressure switch to the terminals as shown in Figure 3 below.

## System Controls Operation

The TX 1440 Whole House RO is designed with a simple control mechanism. The unit uses one external dry contact to run the system. The RO control board will internally power this dry contact, using a low voltage signal (5 VDC).

The system operation wire harness is designed to be installed to a N.O. level or pressure control switch. When the switch closes, the unit will shut down.

**Note:** Terminals on board accept wire size up to #12 AWG.

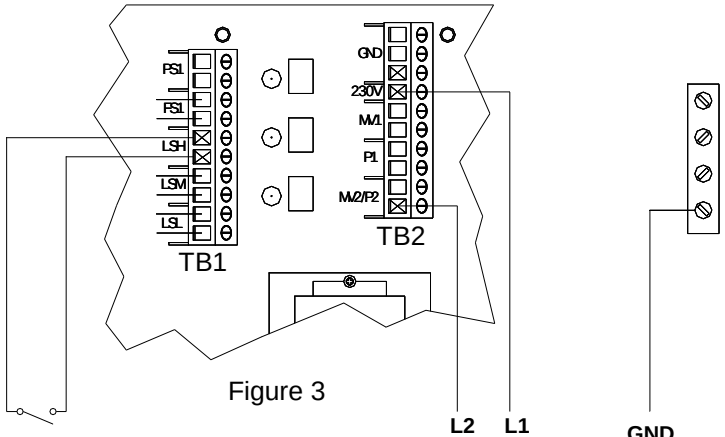


Figure 3

**Normally Open Level Part No. 7552 or Pressure Switch Part No. 10284A**

**L2 L1 240 VAC Single Phase**

**GND Ground**

# Optional Atmospheric Tank Installation

**Tools and Installation Materials**
3/8” Tubing
1” Plastic Piping
Teflon® Tape
Pipe Sealant
1 1/4” Threaded Male Adapter for Pump Inlet
1” Threaded Male Adapter for Pump Outlet
Plastic Pipe Cleaner
Plastic Pipe Cement
Plastic Pipe Cutter

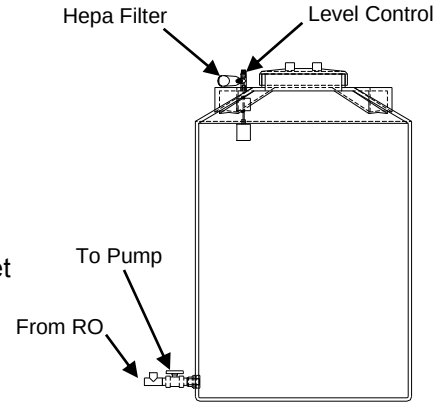


Use both Teflon tape and pipe sealant on all threaded connections. It is not necessary to thread connections to a complete stop. Leaving 2 -3 threads exposed will minimize the potential for fittings to crack. For plastic connections, make sure fittings are first cleaned, then glued. For tubing connections, plastic tubing should be cut straight with a sharp blade. These procedures will minimize leaks at the connections.

**NOTE:** If overflow is required, consult the technical service department.

# Tank Connection

Refer to Figure 4 at right.

- The figure at right shows the tank connection assembly.
- Connect 3/8” tubing connector to 1/2” x 1” reducer bushing.
- Connect adaptor to outlet of 1” NPT tee.
- To other outlet of tee, connect 1” short nipple.
- Connect 1” 90º elbow to the 1” short nipple.
- Connect 1” short nipple to 1” 90º elbow.
- Connect nipple to 1” NPT check valve.
- To common inlet of tee, connect 1” short nipple.
- To nipple, connect 1” true union ball valve.
- To other end of ball valve, connect 1” short nipple.
- Disassemble the true union ball valve with the nipple. Make the connection from this nipple to the tank.
- Reassemble ball valve.
- Add an overflow connection to the tank. Overflow should be connected to an air gap prior to the drain.

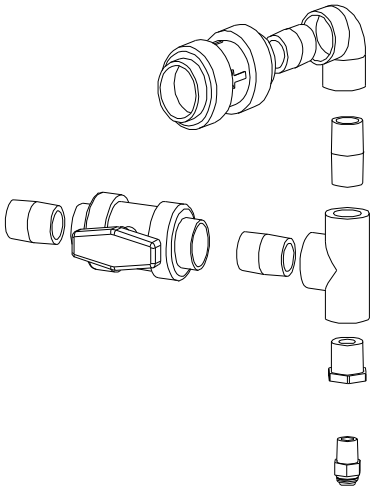

Figure 4

# High Level Control

Refer to Figure 5 at right.

- Assemble the float switch components to the top of the tank.
- Place the level control switch with the cord in the tank through the manway.
- Guide the cord out of the tank through the bulkhead, nipple, tee and the cord grip.
- Tighten in place.
- Thread the HEPA filter horizontally onto the 3/8” nipple in the TEE.
- Disconnect all power to the TX 1440 system.
- Open the door on the front of the system.
- Route the cord into the TX 1440 control box using another cord grip.
- Connect the wiring to the “System Float” terminals as shown on the electrical wiring diagram (Figure 3 on page 13).

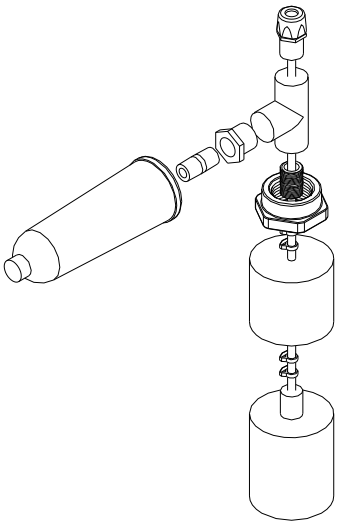

Figure 5

## Optional Captive Air (Bladder) Tank Installation

In some applications a captive air style (bladder) tank may be used instead of an atmospheric tank. When installing a captive air style tank with a TX RO a reverse acting pressure switch and relief valve are required. The pressure switch is set at 30/50 to turn the TX RO on at 30 psi and shut it off at 50 psi.

**Important:** The relief valve is used as a safety in case the pressure switch fails. The relief valve is set at 100 psi to open up and allow pressure to relieve from the tank. The relief line is run to the drain.

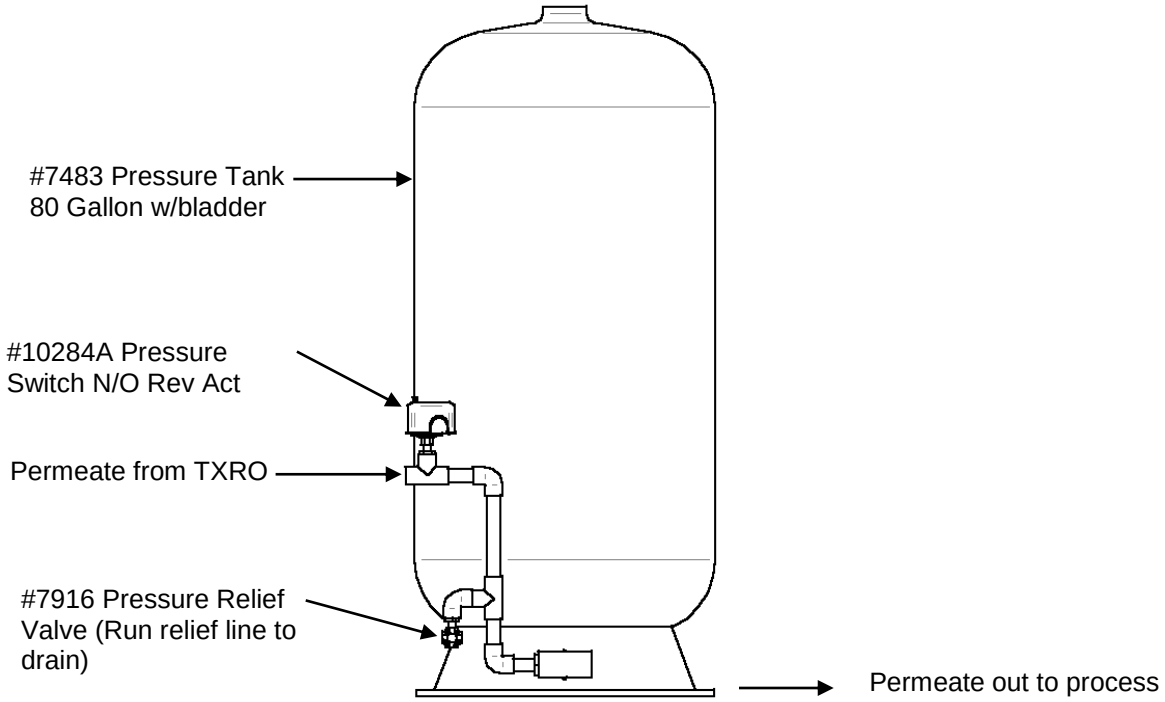


1. The #10284A Pressure Switch spring is set so that the turn on pressure is 30 psi and the turn off is 50 psi. (Note: The 30/50 setting is standard. If a different switch setting is required, the spring on the switch must be adjusted.)
2. Connect 2 conductor cables (2 wires) to the normally open contacts on the #10284A Pressure Switch. This is a low voltage contact so the wire conductor size can vary (normally between 14 and 20 gauge).
3. Run the 2 conductor cables into the TX RO control panel and connect to the contacts on the controller marked LSH (Figure 6).

**Note:** Terminals on board accept wire size up to #12 AWG.

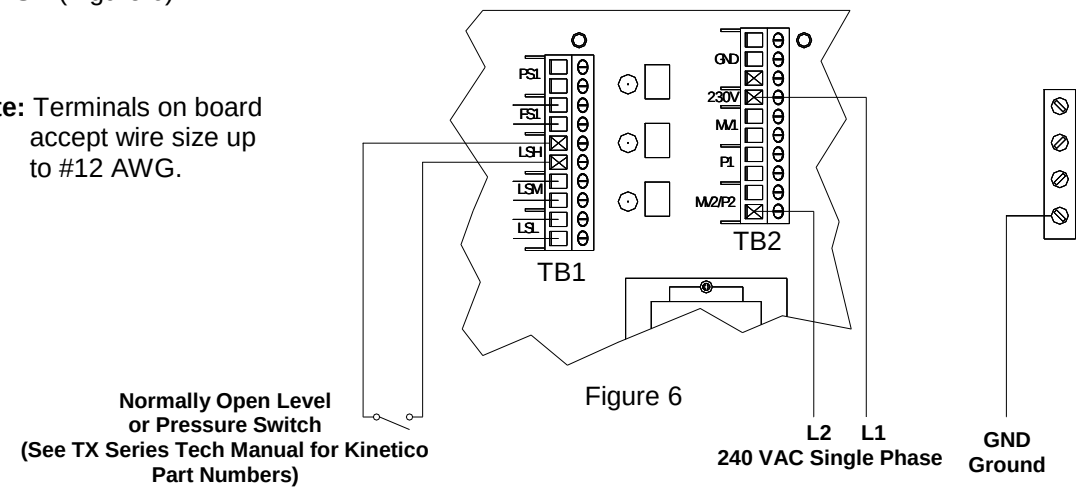


Figure 6

# System Commissioning (Initial Start-up)

The start-up procedures for the equipment should be followed if:

-it is the first time the unit is being put into operation.
-the equipment has been moved.
-the unit has been shut down for an extended period of time (a few weeks).

After completing these start-up procedures, the normal operating procedure should be followed. Make sure unit has been properly installed by reviewing the installation section.

**Recommended Start-up Tools**
3/8” Tubing
Tube Cutter
Portable Conductivity Meter

1) Temporarily connect permeate line to drain using 3/8” tubing.
2) Open feed water valve slowly to pressurize the system.
3) Check unit for leaks.
4) Tighten any connections exhibiting leaks.
5) Do not use a pipe wrench to tighten plastic pipe connections. This may result in damage to the pipe, causing a rupture in the plumbing assembly.
6) Turn on disconnect switch.
7) This will activate the pump. The pump may shut down a number of times while the system purges itself of air.
8) After 10 minutes of operation, the membranes should be adequately flushed of any preservatives.
9) Take a sample of the permeate water, measuring conductivity using a portable monitor.
10) Observe system pressure shown on pressure gauge. System operating pressure is affected by the feed pressure and the normal operating range is 85 – 130 psi. Consult tech service if pressure is outside of the range, as the drain/or recycle orifice plate will need to be changed to bring pressure within proper operating range.
11) Shut the system down by switching off the disconnect.
12) Connect permeate line to the storage tank.
13) Turn disconnect on.
14) At this time, permeate water should begin filling the storage tank.
15) Check for proper shutoff of system by manually triggering tank full level switch/pressure switch.

# PARTS

### Electrical Components

| Description | Part Number | Qty. |
|---|---|---|
| Low Pressure Switch | 13589A | 1 |
| Control Box CRO | 13570B | 1 |
| Inlet Solenoid Valve | 8480A | 1 |
| Thermostat | 13569 | 1 |
| Fuse, .3 Amp | 9864 | 2 |
| Motor, ¾ HP | 10288 | 1 |
| Pump, ¾ HP | 10287 | 1 |

### Plumbing Components

| Description | Part Number | Qty. |
|---|---|---|
| Check Valve 3/8 | 8954C | 1 |
| Gauge 0-160 psi | 8307A | 1 |
| Membrane Tube O-ring 244 | 13561 | 4 |
| Membrane Nipple O-ring 116 | 12703 | 4 |
| XLE Membrane 4040 | 10230 | 1 |
| Flow Disc 1.4 gpm | 10243 | - |
| Flow Disc 2.5 gpm | 8384 | - |
| Flow Disc 2.8 gpm | 10244 | - |
| Flow Disc 4.1 gpm | 10245 | - |
| Flow Disc 5.0 gpm | 13597 | - |
| Flow Disc 5.5 gpm | 10246 | - |
| Flow Disc 8.0 gpm | 13592 | - |
| E-clip, Internal | 13573 | 2 |
| Drain Fitting – Flow Disc | 13567 | 1 |

# PARTS IDENTIFICATION

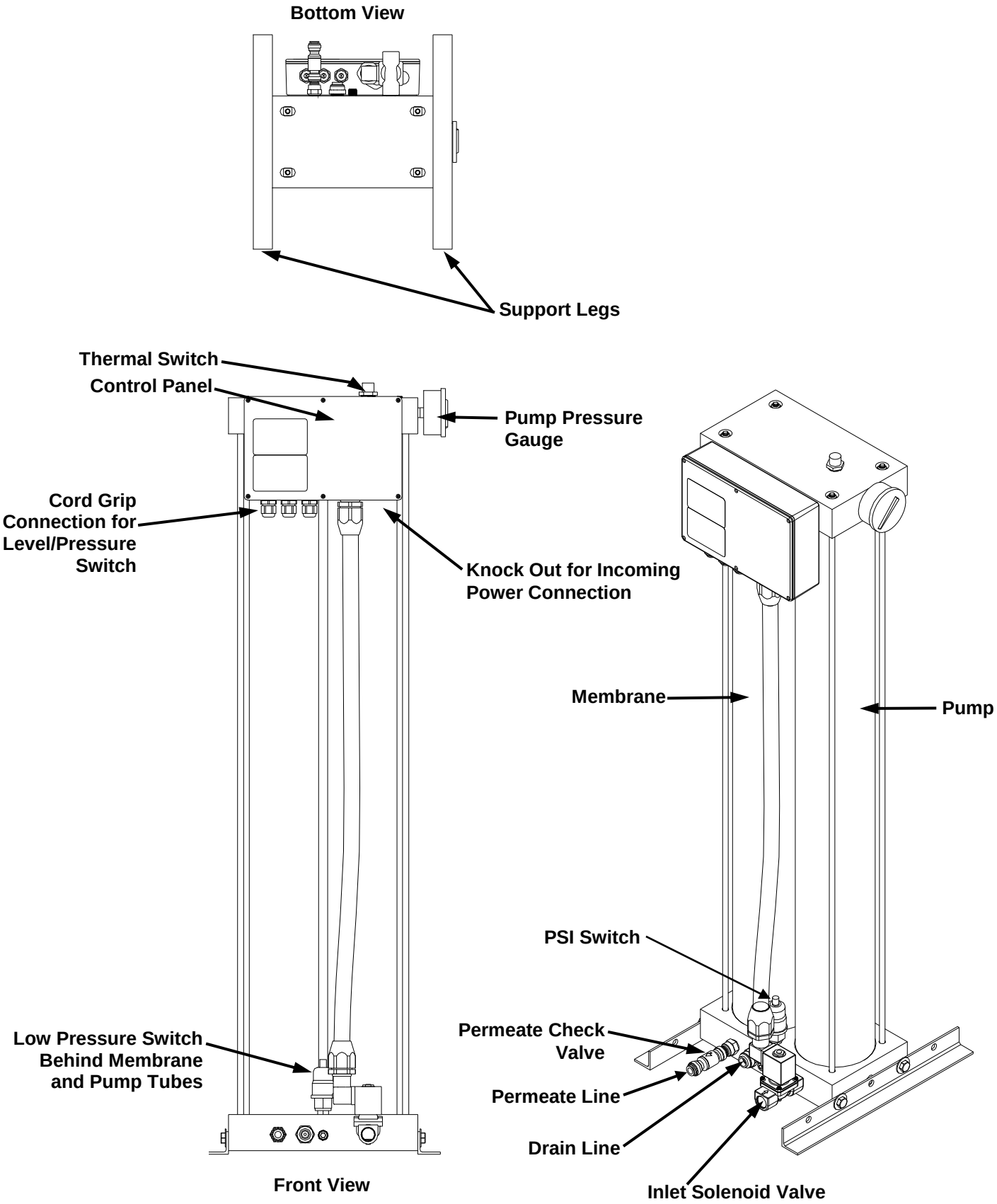

# TROUBLESHOOTING

## System Dead – No Operation

| | |
|---|---|
| Incoming power was interrupted | Make sure incoming branch circuit is on. |
| Blown fuse | Make sure incoming branch circuit is powered on all three phases. |
|  | Turn off TX RO disconnect.<br>Open enclosure.<br>Remove each fuse one at a time.<br>Check solenoid valve inline fuses in control box.<br>Check continuity of fuse.<br>Replace with new fuse only after determining why the fuse blew. |

## RO Pump Never Starts

| | |
|---|---|
| No power | Use guidelines from “System Dead.” |
| System does not need to make water yet | Make sure the system float is in the down position, then wait for the appropriate time delay (factory default is 6 second delay). |
| High level float incorrect | The system will begin running with an open contact from the high level float. Check wiring and continuity of switch in off and on positions. |
| High level float switch not operating correctly | Verify operation with continuity tester. |

## Feed Tank Overflows

| | |
|---|---|
| Level float malfunction | Check placement of high level float. Float should engage contact before water level reaches top of tank. |
| Inlet solenoid valve not shutting | Shut system down. After completion of a tank fill cycle, check permeate and drain line. No water should be flowing. If a flow is present, isolate system, and check inlet solenoid valve. |

## Poor Quality

| | |
|---|---|
| Inlet TDS too high | Check inlet TDS. TX RO is designed to operate with a ~ 98% rejection. |
| System not operating within specifications | Confirm system operating parameters. System should run at provided permeate, recycle and reject flow rates. |
| Brine seal leak | Check permeate conductivity. |

| | |
|---|---|
| Chlorine damage to membranes | Check inlet chlorine levels, residual less than 0.05 mg/L is required to prevent thin film composite membrane deterioration. |

## System Not Consistently Running

| | |
|---|---|
| Low pressure | Feed pressure too low. Check inlet PSI while system is running. System will shutdown if feed psi is below 15 psi (1.0 bar). |
| Filter cartridge | Replace if pressure loss exceeds 5 psi. |
| System leak | Check and repair. |
| Low permeate flow | Water temperature is low. |
| | Membranes are fouled. |
| Membranes fouled | Check system log for history. If consistent declining production is found, clean membranes. Consult your Kinetico dealer for appropriate cleaning procedures and chemicals. |
| | Confirm system operating parameters. |
| Float switch not operating properly | Check operation of high level switch. |

## Poor Production Volume

| | |
|---|---|
| System not operating within specifications | Confirm system operating parameters. System should run at provided permeate, recycle and reject flow rates. |
| Cold temperature | Inlet temperature less than 77 $^{o}$F. |
| Fouled membranes | Check permeate quality. |
| Low pump pressure | The TX RO systems are designed to permeate projected volumes at a pump pressure of 110 psi and a temperature at least 77 $^{o}$F. Check if pump pressure yields less than 110 psi. |
| Inlet quality changes | Analyze RO feed for chlorine, hardness and temperature. |

# NOTES:

# OWNERS MANUAL

# TX SERIES



Product No. 13591D